Ka Shing Enterprise (H.K.) Ltd.
ROOM 1706 NEW TERRITORIES TSUEN WAN HO LIK CENTRE, 66A SHA TSUI ROAD
Tel:26280661 Fax: 24902700
Email: project@kashingehk.com
Website: www.kashingehk.com

PROJECT		REF		REV	ITEM CODE	
LOCATION		DATE			PAGE	

SANITARY WARE SPECIFICATION SHEET

Item Descriptions	Cisal (Italy) Wall-mounted single-lever sink mixer 1/2" with chrome plated finish	Illustration/ Drawing
Model	FU41	
Finish	Chrome Plated	
Manufacturer	Cisal (Italy)	
Source	Ka Shing Enterprises (H.K) Limted Mr. Ivan Lau / Mr. GilmanYuen	
Contact Tel/Fax E-mail Website	(852) 2628-0661 / (852) 2490-2700 project@kashingehk.com www.kashingehk.com	

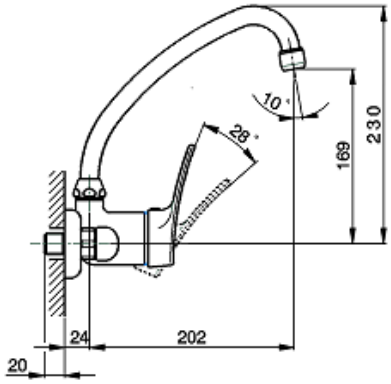

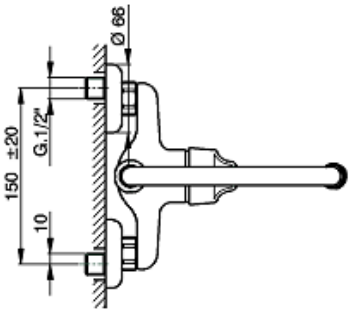

Note:

** All information of the above is for the reference only. No prior notice is made if any changes.*