Ka Shing Enterprise (H.K.) Ltd.
ROOM 1706 NEW TERRITORIES TSUEN WAN HO LIK CENTRE, 66A SHA TSUI ROAD
Tel:26280661 Fax: 24902700
Email: project@kashingehk.com
Website: www.kashingehk.com

| PROJECT | | REF | | REV | ITEM CODE | |
|---|---|---|---|---|---|---|
| LOCATION | | DATE | | | PAGE | |

# SANITARY WARE SPECIFICATION SHEET

| Item Descriptions | Cisal (Italy) Single lever sink mixer,swivel spout,G.3/8" stainless steel flexible hoses | Illustration/ Drawing |
|---|---|---|
| Model | C2-53 | |
| Finish | Chrome Plated | |
| Manufacturer | Cisal (Italy) | |
| Source | Ka Shing Enterprises (H.K) Limted<br>Mr. Ivan Lau / Mr. GilmanYuen | |
| Contact Tel/Fax<br>E-mail<br>Website | (852) 2628-0661 / (852) 2490-2700<br>project@kashingehk.com<br>www.kashingehk.com | |

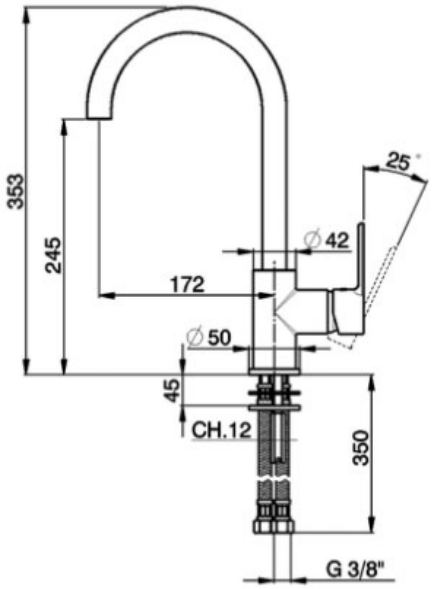


Note:

** All information of the above is for the reference only. No prior notice is made if any changes.*