Hook

BOBRICK

SANITARY WARE SPECIFICATION SHEET

Model: B-211

Descriptions: Bobrick(USA) Mounts with three exposed countersunk mounting screw holes. Hook and flange are one-piece brass casting with satin nickel-plated finish to match stainless steel. Withstands 300 lbs (136 kg) downward pull. Flange diameter: 2 3/4″ (70mm). Unit projects 3 7/16″ (85mm).

Dimensions:	L85 x W70 x H70 mm	Material :	Stainless Steel
Manufacturer:	Bobrick Washroom Equipment Inc. (USA)	Finish :	Satin

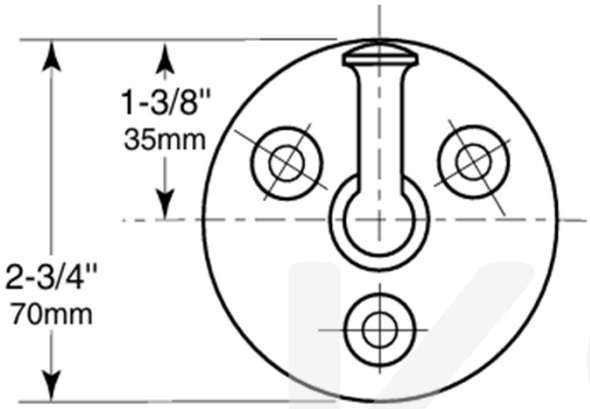

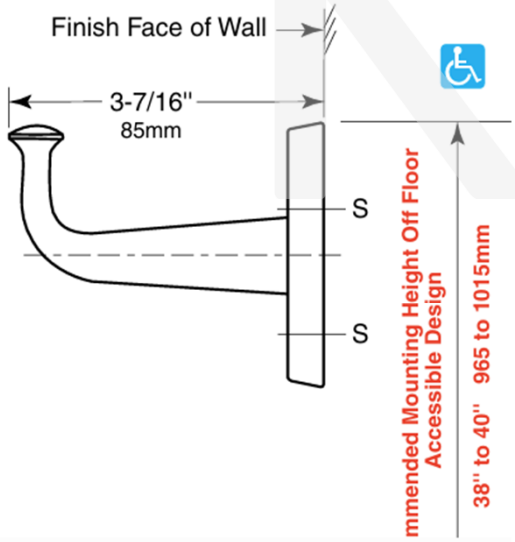

Materials:
Hook and Flange — One-piece brass casting with satin nickel-plated finish. Withstands 300-lb (136-kg) downward pull if properly installed.

Installation:
Mount unit on wall with three sheet-metal screws, furnished by manufacturer, at points indicated by an S. For plaster or dry wall construction, provide concealed backing to comply with local building codes, then secure hook with screws furnished. For other wall surfaces, provide fiber plugs or expansion shields for use with screws furnished, or provide toggle bolts or expansion bolts.

Specification:
Heavy-duty robe hook shall be one-piece brass casting with satin nickel-plated finish. Hook shall withstand 300-lb (136-kg) downward pull when properly installed.

** All information of the above is for the reference only. No prior notice is made if any changes.*

Ka Shing Enterprise (H.K.) Ltd.
ROOM 1706 NEW TERRITORIES TSUEN WAN HO LIK CENTRE, 66A SHA TSUI ROAD
Tel:26280661 Fax: 24902700
Email: project@kashingehk.com
Website: www.kashingehk.com

Ivan / Horace 26280661
E/ project@kashingehk.com
W/ https://www.kashingehk.com/